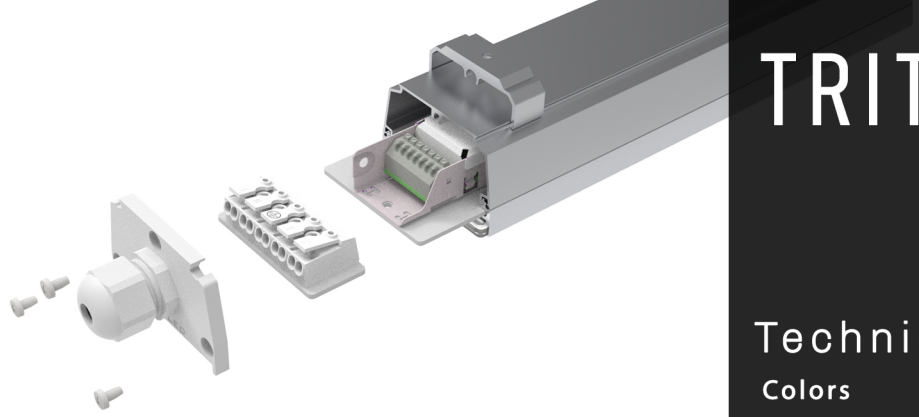

TRITON LED MAX

MAX Series- Lights up spaces effectively

For easy installation, durability and sustainability!

Our quest for sustainable and efficient lighting solutions, modern design principles combined with technological advancements have led to significant benefits)

Optimized Design for Efficiency: Fewer fixtures needed, which reduces investment costs and simplifies the overall lighting scheme.

Easy Installation, Swift and Simple Setup: Engineered for rapid installation, reducing working hours and costs (Remove if there's no space;, "for both new installations and retrofits". Modular plug-and-play components significantly cut down the complexity.

Reusability and Recycling - Low Environmental Footprint: Designed with sustainability in mind. Advanced technology ensures a longer lifespan. All components are easily disassembled, allowing for parts to be reused, or recycled. Our design philosophy minimizes waste and supports a circular economy.

Features:

- Flicker Free Light Distribution
- Extensive functionality
- Highly efficient lifetime solution
- Easy installation and maintenance
- Controllable and programmable Driver
- Precise and high quality output
- Robust, compact design integrated into the architectural structure.

Technical Data

Colors	3000K-4000K-5000K-6500K
Lumen:	80Ra:178–195 (Energy label A or B) 90Ra:150–167 (Energy label B or C)
CRI:	Ra80 / Option: Ra90
Optics Angle:	30°, 60°, 90°, 110° (PMMA)
Driver:	Dali2 (B2L), OnOff
Power Consuption:	Up to 59W/m (15-120W)
Current Variations:	250mA-500mA
Average Lifetime:	100.000h/@25°C - L90/B10 72.000h/@40°C - L80/B10 56.000h/@75°C - L80/B20
Temperature:	-15°C to 50°C
Size Increments:	500mm (500 - 3000mm.)
IP Grade:	Cable gland: IP43
Material:	6061 Anodized Aluminium
Color Options:	Silver, White, Black
Accessories	Bracket: Standard 15mm Option: 30mm, 150mm, 240mm
Certifications:	CE (EMC, LVD, RoHS), EUR1.

Wireless protocols: MultiSensors:

B2L ready · DIMMABLE · FLICKER FREE

DRIVER protocols:

DALI 2 · AP (on/off)

WARRANTY 5 YEAR WARRANTY

Applications:

- Storage Lighting
- Sports Hall Lighting
- Industrial Lighting
- Commercial Lighting

TRITONLED
www.triton-solutions.co

Technical Drawing:

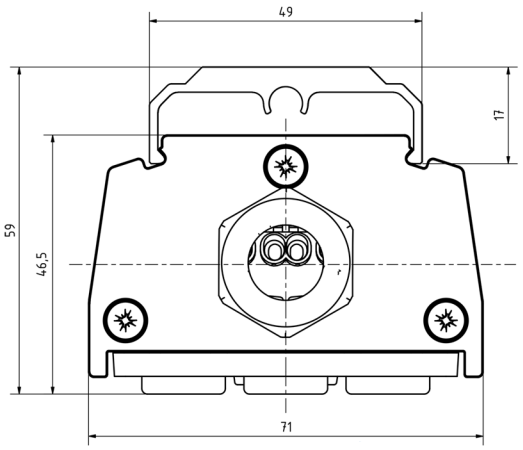

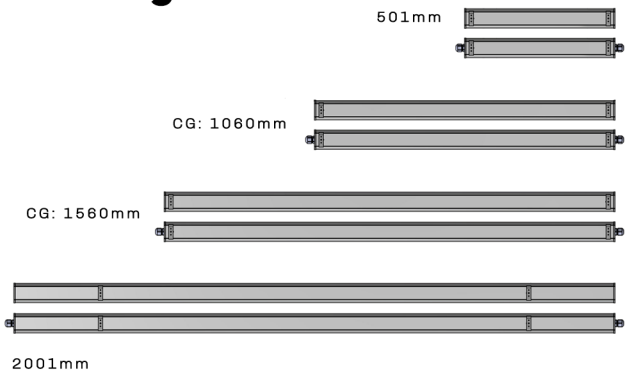

500 - 2000 mm

Power usage, Lm/W

Triton **MAX** - 201 Lm ledmodules									
Art.nr Lenght	**LENGHT (mm)**	**Effect** wattage	Amp (mA)	**Lm/W Ra80**	Led module Lumen	Fixture LUMEN (230V)	**Lm/W Ra90**	Led module	Fixture Efficiency (Lm)(230V)
A	**500**	14W	250	195	2652	2510Lm	**167**	2272	**2150**
A	**500**	20W	350	188	3685	3500Lm	**165**	3234	**3070**
A	**500**	**29W**	**500**	**178**	5180	**4920Lm**	**150**	4365	**4140**
B	**1000**	27W	250	195	5304	5030Lm	**167**	4543	**4310**
B	**1000**	39W	300	188	7370	7000Lm	**165**	6468	**6140**
B	**1000**	**58W**	**500**	**178**	10360	**9840Lm**	**150**	8730	**8290**
C	**1500**	27W	150	199	5413	5140Lm	**171**	4652	**4410**
C	**1500**	33W	200	198	6416	6090Lm	**169**	5476	**5200**
C	**1500**	41W	250	195	7956	7550Lm	**167**	6814	**6470**
C	**1500**	59W	300	188	11055	10500Lm	**165**	9702	**9210**
C	**1500**	**87W**	**500**	**178**	15540	**14760Lm**	**150**	13095	**12440**
D	**2000**	43W	200	198	8554	8120Lm	**169**	7301	**6930**
D	**2000**	55W	250	195	10608	10070Lm	**167**	9085	**8630**
D	**2000**	78W	300	188	14740	14000Lm	**165**	12936	**12280**
D	**2000**	**118W**	**500**	**178**	20720	**19680Lm**	**150**	17460	**16580**

MAX, TM series - Cable gland, IP43

MAX, TM series - Cable Gland (CG) OnOff IP43

TMA29K0(x)8C3A	MAX TM05 - 0,5m 29W 4920Lm 4K OnOff Ra80 CG IP43 IK06
TMB58K0(x)8C3A	MAX TM10 - 1,0m 58W 9840Lm 4K OnOff Ra80 CG IP43 IK06
TMC87K0(x)8C3A	MAX TM15 - 1,5m 87W 14760Lm 4K OnOff Ra80 CG IP43 IK06
TMD11K0(x)8C3A	MAX TM20 - 2,0m 118W 19680Lm 4K OnOff Ra80 CG IP43 IK06

MAX, TM series - Cable Gland (CG) DALI2 IP43

TMA29K2(x)8C3A	MAX TM05 - 0,5m 29W 4920Lm 4K Dali2 Ra80 CG IP43 IK06
TMB58K2(x)8C3A	MAX TM10 - 1m 58W 9840Lm 4K Dali2 Ra80 CG IP43 IK06
TMC87K2(x)8C3A	MAX TM15 - 1,5m 87W 14760Lm 4K Dali2 Ra80 CG IP43 IK06
TMD11K3(x)8C3A	MAX TM20 - 2m 118W 19680Lm 4K B2LD2 Ra80 CG IP43 IK06

Sensor and Bluetooth controllers, B2L info: See separate page below.

OPTICS

Art.nr Optic	Info Optic
O	30° HighRack
P	60° Medium
T	90° Wide
W	110° Wide
D	110° Diffuse
Y	Retail Sym1

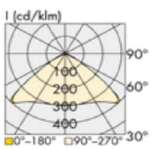

Extra Wide 110°

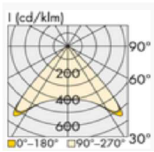

Wide 90°

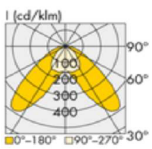

Retail SYM 1

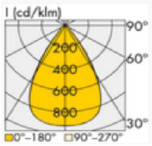

Medium 60°

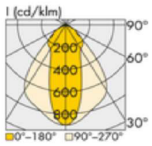

High Rack

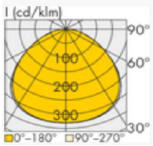

Diffuse 110°

Serbia/Sweden
Novi Sad/Karlstad
office@triton.rs
info@tritonled.se

Disclaimer:
Triton reserves the right to make changes to this product at any time without prior notice and such modifications shall be effective immediately. For more information and detail, visit www.triton.rs or contact office@triton.rs
© Triton Engineering

TRITON LED MAX